ASCE NATIONAL CAPITAL SECTION eNewsletter
National Capital Section
FOUNDED 1916

MARCH 2016

DR. Z's CORNER

Conquering the FE & PE exams

Problems & Applications

Topics covered in this month's column:

- FE CIVIL Exam Topics & Number of Questions
- Types of Calculators / FE and PE Exams
- Technology Usage / Binary-Decimal Numbers
- Mathematics / Conic Sections
- Mathematics / Vectors & Cross Products
- Mathematics / Matrix Computations
- Mathematics / ODE & Roots of Equations
- Geotechnical / Pile Foundations
- Strength of Material / Torsion
- Centroids & Moments of Inertia
- Structural / Indeterminate Beam Analysis
- Structural / V and M Diagrams
- Structural Design / Steel Columns

FUNDAMENTALS OF ENGINEERING

CIVIL EXAM TOPICS
Computer-Based Test (CBT)

Total Number of Questions: 110
Time: 6 hours

The new Civil FE Computer-Based Test (CBT) consists of 110 multiple-choice questions (Each problem only one question) the examinee will have 6 hours to complete the test.

- **Mathematics (Approx. 9 questions*)**
- **Probability and Statistics (5 questions)**
- **Computational Tools (5 questions)**
- **Ethics and Professional Practice (5 questions)**
- **Engineering Economics (5 questions)**
- **Statics (9 questions)**
- **Dynamics (5 questions)**
- **Mechanics of Materials (9 questions)**
- **Civil Engineering Materials (5 questions)**
- **Fluid Mechanics (5 questions)**
- **Hydraulics and Hydrologic Systems (10 questions)**
- **Structural Analysis (8 questions)**
- **Structural Design (8 questions)**
- **Geotechnical Engineering (12 questions)**
- **Transportation Engineering (10 questions)**
- **Environmental Engineering (8 questions)**

* Here the number of questions are the average values taken from the NCEES Reference Handbook (Version 9.3 / Computer-Based Test)

TYPES OF CALCULATORS

ACCEPTABLE FOR USE IN FE / PE EXAMS

To protect the integrity of FE/PE exams, NCEES limits the types of calculators you may bring to exam sites. The only calculator models acceptable for use during the 2016 exams are as follows:

Casio: All fx-115 models. Any Casio calculator must contain fx-115 in its model name. Examples of acceptable Casio fx-115 models include (but are not limited to):

- fx-115 MS
- fx-115 MS Plus
- fx-115 MS SR
- fx-115 ES
- fx-115 ES Plus

Texas Instruments: All TI-30X and TI-36X models. Any Texas Instruments calculator must contain either TI-30X or TI-36X in its model name. Examples of acceptable TI-30X and TI-36X models include (but are not limited to):

- TI-30Xa
- TI-30Xa SOLAR
- TI-30Xa SE
- TI-30XS Multiview
- TI-30X IIB
- TI-30X IIS
- TI-36X II
- TI-36X SOLAR
- TI-36X Pro

Hewlett Packard: The HP 33s and HP 35s models, but no others.

CONIC SECTIONS

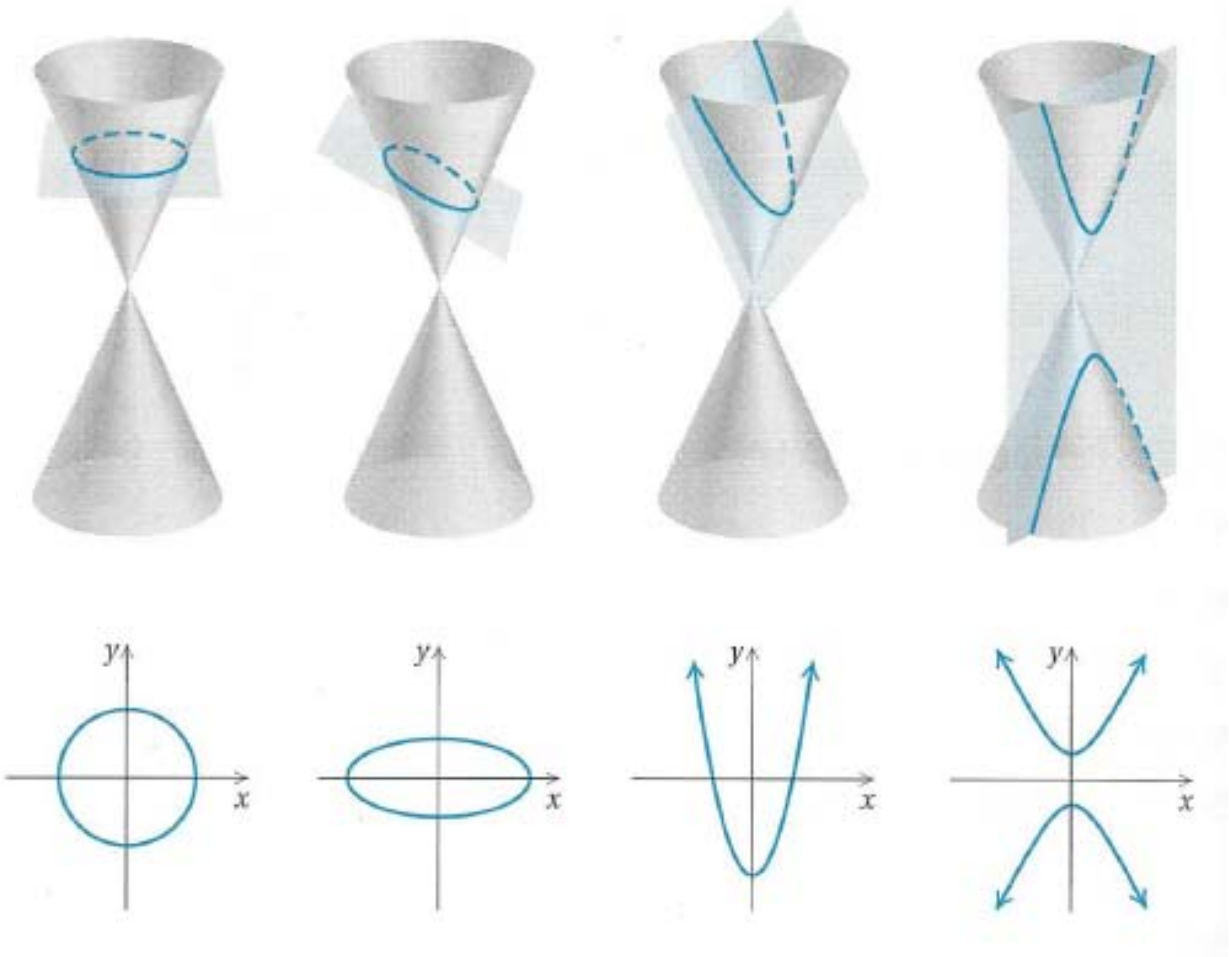

Circle Ellipse Parabola Hyperbola

Math Question

When a cone is cut by a plane parallel to a side of the cone as shown above, the conic section formed is a ---------.

(A) Hyperbola

(B) Circle

(C) Ellipse

(D) Parabola

FUNDAMENTALS OF ENGINEERING

DOMAIN: MATHEMATICS

CONIC SECTIONS

NCEES-Reference Handbook / Page-23

1- Parabola (eccentricity = 1)

$$(y - k)^2 = 2p(x - h)$$

Center: (h, k)

2- Ellipse (eccentricity < 1)

$$\frac{(x-h)^2}{a^2} + \frac{(y-k)^2}{b^2} = 1$$

Center: (h, k)

3- Hyperbola (eccentricity > 1)

$$\frac{(x-h)^2}{a^2} - \frac{(y-k)^2}{b^2} = 1$$

Center: (h, k)

4- Circle (eccentricity = 0)

$$(x - h)^2 + (y - k)^2 = r^2$$

Center: (h, k)

radius:

$$r = \sqrt{(x-h)^2 + (y-k)^2}$$

FUNDAMENTALS OF ENGINEERING

DOMAIN: MATHEMATICS

EQUATION OF A CIRCLE

(NCEES-Ref Handbook / Page-23)

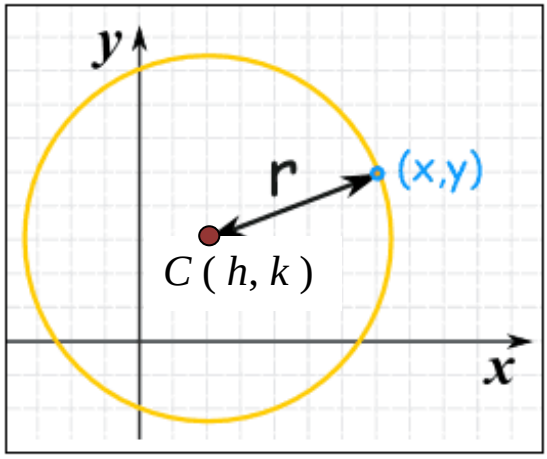

Center: $C\ (h, k)$

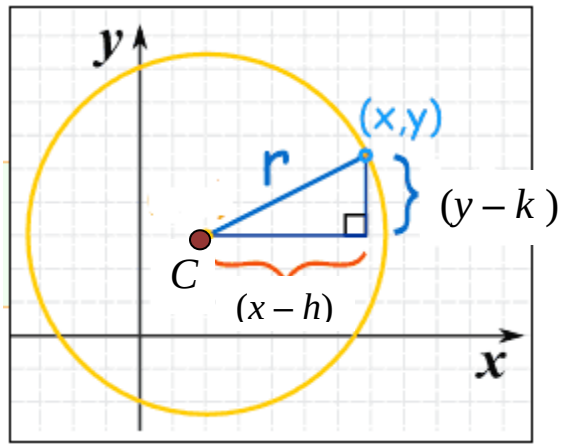

Radius: r

Standard form of Equation of a Circle

$$(x-h)^2 + (y-k)^2 = r^2$$

$$r = \text{SQRT}\,[(x-h)^2 + (y-k)^2]$$

Example:

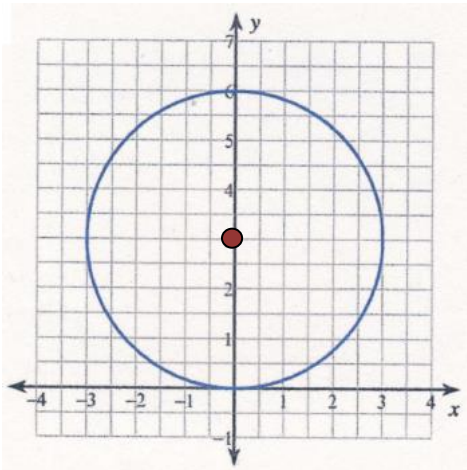

$$x^2 + (y-3)^2 = 9$$

FUNDAMENTALS OF ENGINEERING

EQUATION OF A CIRCLE & SPHERE

FE EXAM

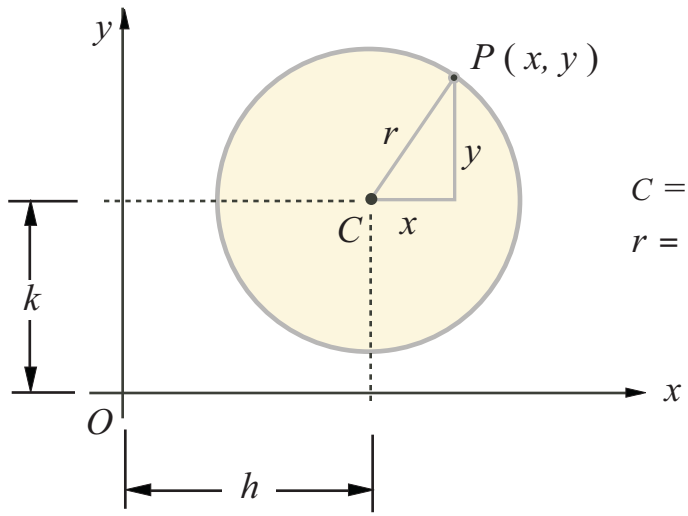

C = Center

r = radius

Center
$C\,(h, k)$

The standard form of the equation for a *CIRCLE*:

NCEES-RH PAGE-26

$$(x-h)^2 + (y-k)^2 = r^2$$

Center at (h, k)

r = radius of circle

The standard form of the equation for a *SPHERE:*

NCEES-RH PAGE-21

$$(x-h)^2 + (y-k)^2 + (z-m)^2 = r^2$$

Center at (h, k, m)

r = radius of sphere

A sphere is defined as the set of all points in three-dimensional Euclidean space $\mathbf{R}^3$ that are located at a distance r from a given point C. Here r is the *radius* and C is the *center* of the sphere.

FUNDAMENTALS OF ENGINEERING

EQUATION OF A SPHERE

Problem: (Equation of a sphere)

FE EXAM

SPHERE

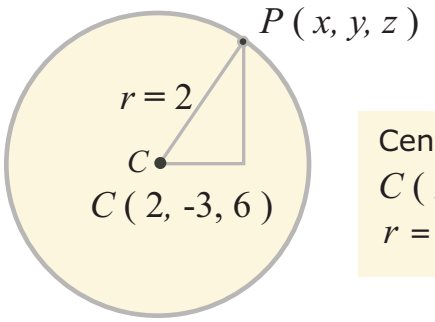

Center
C (2, -3, 6)
r = 2 (radius)

$$(x-h)^2 + (y-k)^2 + (z-m)^2 = r^2$$

Center at (h, k, m), r = radius

NCEES-RH PAGE-21

The equation of a sphere with center at (2, -3, 6) and a radius of r = 2 is most nearly:

(A) $(x+2)^2 + (y-3)^2 + (z-6)^2 = 2$

(B) $(x-2)^2 + (y+3)^2 + (z+6)^2 = 2$

(C) $(x+2)^2 + (y+3)^2 + (z-6)^2 = 4$

(D) $(x-2)^2 + (y+3)^2 + (z-6)^2 = 4$

NUMBER SYSTEMS
BINARY & DECIMAL
NCEES Reference Handbook, Page: 213

Binary Number System:

In digital computers, binary number system (the base-2) is used. Conversions from BINARY to DECIMAL or from DECIMAL to BINARY can easily be done using the calculator. Binary (base-2), decimal (base-10).

Problem:

Find the binary equivalent of decimal 25?

1) Press MODE
2) Press "4"
3) Enter 25 and press " **=** "
4) Make sure to see 25 under **Dec** on the screen
5) Press SHIFT then "log"
6) Answer: 11001

Turn on your calculator

Problem:

Find the decimal equivalent of binary 1111?

1) Press MODE
2) Press "4"
3) Press SHIFT then press "log" key
4) Enter 1111 and then press " **=** "
5) Make sure to see 1111 under **Bin** on the screen
6) Press SHIFT then hit " x^2 " key
7) Answer: 15

Turn on your calculator

First Press MODE, then Press 4 for **BASE-N**

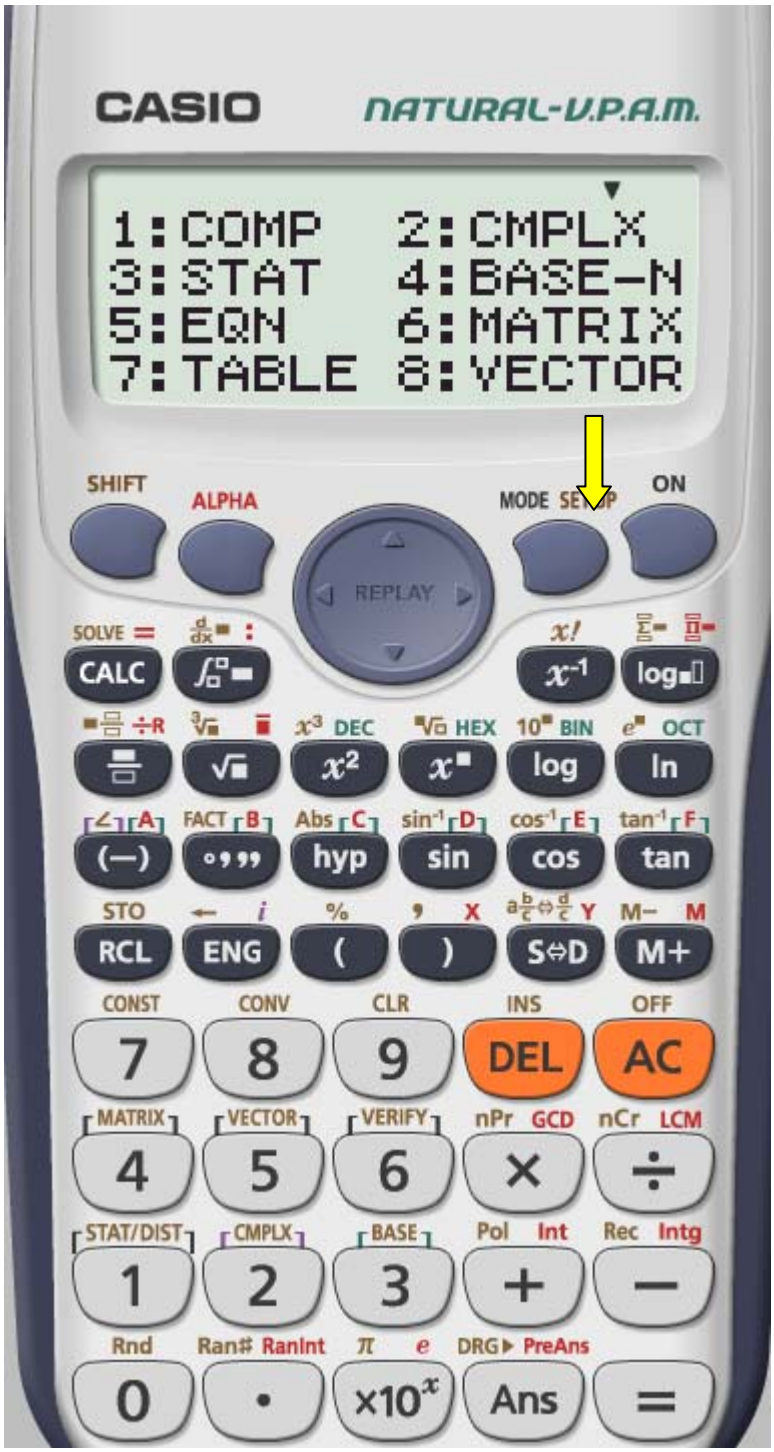

Step-by-step Screen Shots:

Press [2] [5] ***and press*** [=] ***key***

Press [SHIFT] ***and then*** [log] *to get the answer*

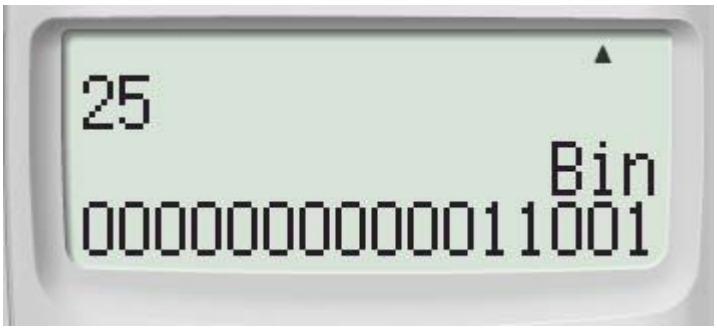

Answer: 11001

Step-by-step Screen Shots:

Press SHIFT ***and then*** log

Enter 1 1 1 1

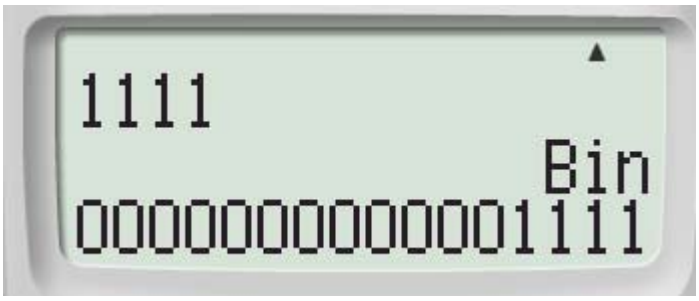

Press SHIFT ***then hit*** x^2 ***to get the answer***

Answer: **15**

CONVERTING BINARY NUMBERS TO DECIMALS

Convert binary 1011 to decimal:

3 2 1 0 ← power of 2

$1011_2 = 1 \times 2^3 \rightarrow 8$

$0 \times 2^2 \rightarrow 0$

$1 \times 2^1 \rightarrow 2$

$1 \times 2^0 \rightarrow 1$

$\rightarrow 11$

Answer: 11

Convert decimal 18 to binary:

$18_{10} = ?$

18 / 2 = 9 and rem = 0 (_ _ _ _ 0_2)

9 / 2 = 4 and rem = 1 (_ _ _ 10_2)

4 / 2 = 2 and rem = 0 (_ _ 010_2)

2 / 2 = 1 and rem = 0 (finish! 10010_2)

(Here keep dividing by base 2)
Until the quotient < base

Answer: 10010

Problem - 2

Equation of a parabola

Consider a second degree parabola; when the line of symmetry is parallel to the x - axis, then the equation of the parabola is most nearly:

(A) $y = ax^2 + bx + c$

(B) $y = -ax^2 - bx - c$

(C) $x = ax^2 + by + c$

(D) $x = ay^2 + by + c$

Problem – 3

The vertex of a parabola

$$y = x^2 - 4x + 9$$

The coordinates of the vertex of this parabola is most nearly:

(A) $(-2, 5)$

(B) $(2, -5)$

(C) $(2, 5)$

(D) $(-2, -5)$

(The vertex of a parabola)

HINT

$$y = ax^2 + bx + c$$

To find the x - coordinate of the vertex, first calculate: $x = -b / 2a$

Then insert the value in the equation ($y = ax^2 + bx + c$) to get the y - coordinate of the vertex.

Problem – 4

Euler's identity

Knowing that j = Sqrt (-1), the Euler's identity is most nearly:

(A) $e^{j\theta} = \cos\theta - j\sin\theta$

(B) $e^{j\theta} = \sin^2\theta + j\cos^2\theta$

(C) $e^{j\theta} = -\sin\theta + j\cos\theta$

(D) $e^{j\theta} = \cos\theta + j\sin\theta$

Euler's Identity

HINT

Refer to NCEES Ref. Handbook
Version 9.3, page-22

Problem – 5

The MIDPOINT Formula

If the endpoints of the segment are (– 2, 3) and (4, – 6) then the coordinates of the midpoint of the segment is most nearly :

(A) (0.5, -1.5)

(B) (- 1.5, 1)

(C) (-1, -0.5)

(D) (1, -1.5)

HINT

Coordinates of the Midpoint

$$\left(\frac{x_1 + x_2}{2}, \frac{y_1 + y_2}{2}\right)$$

MATHEMATICS

VECTORS

Dot Product of Two Vectors:

$$\mathbf{a} \cdot \mathbf{b} = |\mathbf{a}| \times |\mathbf{b}| \times \cos(\theta)$$

The result of the dot product is a scalar.

$|\mathbf{a}|$: the magnitude (length) of vector **a**
$|\mathbf{b}|$: the magnitude (length) of vector **b**
θ : the angle between **a** and **b**

Example: (Using Magnitudes / Angle)

$\mathbf{a} \cdot \mathbf{b} = |\mathbf{a}| \times |\mathbf{b}| \times \cos(\theta)$

$\mathbf{a} \cdot \mathbf{b} = 6 \times 10 \times \cos(40°)$

$\mathbf{a} \cdot \mathbf{b} = 6 \times 10 \times 0.766$

$\mathbf{a} \cdot \mathbf{b} = 45.96$ units

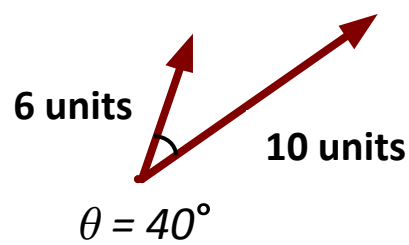

Example: (Using Components)

$\mathbf{a} \cdot \mathbf{b} = a_x \times b_x + a_y \times b_y$

$\mathbf{a} \cdot \mathbf{b} = -3 \times 5 + 4 \times 12$

$\mathbf{a} \cdot \mathbf{b} = -15 + 48$

$\mathbf{a} \cdot \mathbf{b} = 33$ units

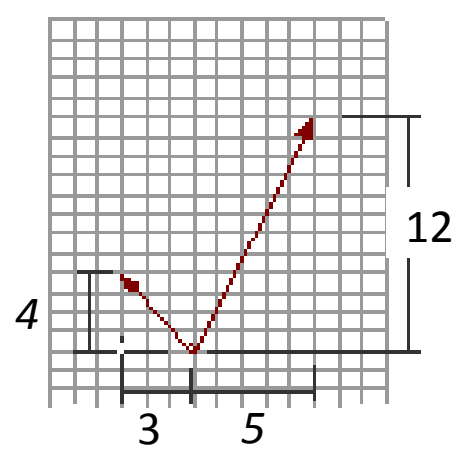

VECTOR COMPUTATIONS

CROSS PRODUCT

Problem:

NCEES
REF. HANDBOOK
PAGE-34

$$\mathbf{A} = a_x\,\mathbf{i} + a_y\,\mathbf{j} + a_z\,\mathbf{k}$$
$$\mathbf{B} = b_x\,\mathbf{i} + b_y\,\mathbf{j} + b_z\,\mathbf{k}$$

The cross product is a vector product of magnitude

|B| x |A| sin θ

|B| |A| sin θ which is perpendicular to the plane containing **A** and **B**. The product is

$$\mathrm{A} \times \mathrm{B} = \begin{vmatrix} \mathbf{i} & \mathbf{j} & \mathbf{k} \\ a_x & a_y & a_z \\ b_x & b_y & b_z \end{vmatrix} = -\ \mathrm{B} \times \mathrm{A}$$

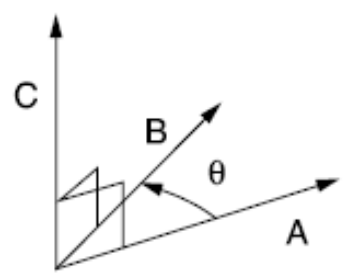

The sense of **A** × **B** is determined by the right-hand rule.

$$\mathbf{A} \times \mathbf{B} = |\mathbf{A}||\mathbf{B}|\mathbf{n}\ \sin\theta, \text{ where}$$

n = unit vector perpendicular to the plane of **A** and **B**.

VECTOR COMPUTATIONS

CROSS PRODUCT

Problem: (Cross product)

$$\mathbf{a} = 3\,\mathbf{i} + 4\,\mathbf{j} - \mathbf{k}$$
$$\mathbf{b} = -2\,\mathbf{i} + 3\,\mathbf{j} + 5\,\mathbf{k}$$

Two vectors are given as shown above. The cross product **a** x **b** is most nearly

(A) $-32\,\mathbf{i} - 3\,\mathbf{j} + 13\,\mathbf{k}$

(B) $-32\,\mathbf{i} + 31\,\mathbf{j} + 7\,\mathbf{k}$

(C) $-23\,\mathbf{i} + 13\,\mathbf{j} + 17\,\mathbf{k}$

(D) $23\,\mathbf{i} - 13\,\mathbf{j} + 17\,\mathbf{k}$

Problem: (Cross product)

$$\mathbf{a} = 5\,\mathbf{i} - 4\,\mathbf{j} + 3\,\mathbf{k}$$
$$\mathbf{b} = 3\,\mathbf{i} + 5\,\mathbf{k}$$

Two vectors are given as shown above. The cross product **a** x **b** is most nearly

(A) $-22\,\mathbf{i} + 3\,\mathbf{j} + 15\,\mathbf{k}$

(B) $-20\,\mathbf{i} - 16\,\mathbf{j} + 12\,\mathbf{k}$

(C) $-21\,\mathbf{i} + 3\,\mathbf{j} + 14\,\mathbf{k}$

(D) $-20\,\mathbf{i} + 16\,\mathbf{j} - 12\,\mathbf{k}$

FIRST ORDER LINEAR
ORDINARY DIFFERENTIAL EQUATIONS

$$\frac{dy}{dx} = \frac{1}{2}y - 450$$

FE EXAM

(a) Find the general solution of this ODE

(b) Find the particular solution when $x = 0$ and $y = 850$

Solution:

$$\frac{dy}{dx} = \frac{1}{2}y - 450$$

$$\frac{dy}{dx} = 0.5\,y - 450$$

$$\frac{dy}{dx} = \frac{2\,(0.5\,y - 450)}{2}$$

$$\frac{dy}{dx} = \frac{y - 900}{2}$$

$$\frac{dy}{y - 900} = \frac{dx}{2}$$

$$\int \frac{dy}{y - 900} = \int \frac{dx}{2}$$

$$\ln|y - 900| = \frac{x}{2} + C_1$$

$$|y - 900| = e^{\frac{x}{2} + C_1}$$

$$|y - 900| = e^{\frac{x}{2}} \cdot e^{C_1}$$

$$|y - 900| = e^{\frac{x}{2}} \cdot C_2$$

$$y - 900 = \pm C_2\, e^{\frac{x}{2}}$$

$$\boxed{y = 900 + C\, e^{\frac{x}{2}}}$$

General Solution

C: Arbitrary constant

Because of the arbitrary constant *C* there will be infinitely many solutions.

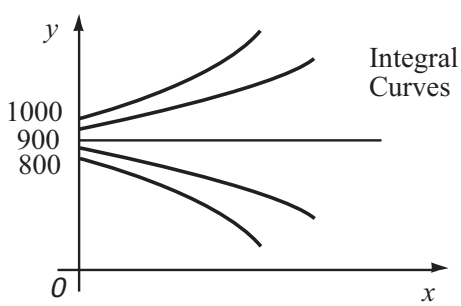

Particular solution is also called Initial Value Problem:

$$\left| \begin{array}{l} x = 0 \\ y = 850 \end{array} \right\} \quad C = -50$$

$$\boxed{y = 900 - 50\, e^{x/2}}$$

Particular Solution

PROBLEM (Ordinary Differential Equation)

$$\frac{dy}{dx} = 2xy$$

An ordinary differential equation is given as shown above.
Using this equation answer the following questions:

(1) the general solution is most nearly:

(A) $y = Ce^{x}$

(B) $y = Ce^{x^2}$

(C) $y = x + Ce^{x}$

(D) $y = \ln e + Ce^{x}$

(2) the particular solution when $x = 1,\ y = 2$ is most nearly:

(A) $y = 2e^{x}$

(B) $y = 2e^{x^2}$

(C) $y = x^2 + 3e^{x}$

(D) $y = 2e^{x^2 - 1}$

ROOTS OF EQUATIONS

MATHEMATICS

NCEES Reference Handbook / Page-265

(1) $$F(x) = \frac{x^3 - 2x^2 - 5x + 6}{x - 3}$$

The roots of the above function $F(x)$ are most nearly

(A) +1, -2, +3
(B) -1, +2
(C) +1, -2
(D) +1, +2, -3

(2) $$F(x) = \frac{x^3 + 3x^2 - 10x - 24}{x + 4}$$

The roots of the above function $F(x)$ are most nearly

(A) +1, -2
(B) -2, +3
(C) +3, -4
(D) +2, -3, +4

THE ROOTS OF FUNCTIONS

MATHEMATICS

$$F(x) = \frac{x^3 + 4x^2 + x - 6}{x + 2}$$

The roots of the above function $F(x)$ are most nearly

(A) +1, -2, +3
(B) -1, +2
(C) +1, -3
(D) +1, +2, -3

Solution:

After factoring and simplification:

$$F(x) = \frac{(x-1)\cancel{(x+2)}(x+3)}{\cancel{(x+2)}}$$

$$(x-1)(x+3) = 0$$

First Root = + 1
Second Root = - 3

Problem: (Matrix Algebra)

$$A = \begin{bmatrix} 3 & -3 & 2 \\ 2 & 5 & -3 \\ 3 & -1 & 1 \end{bmatrix}$$

Using the matrix given above, answer the following questions:

(1) the determinant of the above matrix is most nearly

(A) 4
(B) 5
(C) 6
(D) 8

(2) the inverse of matrix **A** is most nearly, (A^{-1})

(A) $$A^{-1} = \begin{bmatrix} 1/4 & 1/4 & -1/4 \\ 10/4 & 5/4 & 13/4 \\ -10/4 & -4/4 & 11/4 \end{bmatrix}$$

(B) $$A^{-1} = \begin{bmatrix} 2/3 & 1/3 & -1/6 \\ -11/3 & -7/3 & 13/3 \\ -17/3 & -8/3 & 32/3 \end{bmatrix}$$

(C) $$A^{-1} = \begin{bmatrix} 2/5 & 1/5 & 1/5 \\ 11/5 & 3/5 & 13/5 \\ -17/5 & -6/5 & 21/5 \end{bmatrix}$$

(D) $$A^{-1} = \begin{bmatrix} 2/5 & 1/5 & -1/5 \\ -11/5 & -3/5 & 13/5 \\ -17/5 & -6/5 & 21/5 \end{bmatrix}$$

RADICAL EQUATIONS

(1) $2^{3x} = 64$ $\qquad x = ?$

(2) $e^{5t} = 200$ $\qquad t = ?$

(3) $\sqrt{x+1} + \sqrt{x+6} = 5$

(4) $y - 2 = \sqrt{y+4}$

(5) $\sqrt{-2x+3} = 2 - x$

(6) $x - 1 = \sqrt{-4x+9}$

(7) $\sqrt{y} + 1 = 5$

(8) $\sqrt{x-1} + \sqrt{x+4} = 5$

(9) $\sqrt[3]{x-3} - 2 = 0$

(10) $\sqrt{y+1} - \sqrt{2y-6} = 2$

(11) $\sqrt{x+10} - \sqrt{x-10} = 10$

(12) $\sqrt{x+1} - \sqrt{2x+3} = -1$

(13) $\sqrt{x+5} + \sqrt{x+2} = 3$

(14) $3 - \sqrt{x} = 2$

(15) $\sqrt[3]{5x+17} + 1 = 4$

(16) $\sqrt{x+4} + \sqrt{x+1} = 3$

(17) $\sqrt{x+8} + \sqrt{x} = 2$

(18) $\sqrt{8x-1} = \sqrt{4x+15}$

(19) $\sqrt{6x+6} - \sqrt{21-4x} = 5$

(20) $\sqrt{8-2x} - \sqrt{4x+17} = 3$

Answers:

(1)	-2, 1	(2)	4	(3)	3	(4)	5	(5)	1
(6)	2	(7)	16	(8)	5	(9)	11	(10)	3
(11)	*no sol.*	(12)	-1, 3	(13)	-1	(14)	1	(15)	2
(16)	0	(17)	*no sol.*	(18)	4	(19)	5	(20)	-4

ABSOLUTE ERROR & RELATIVE ERROR

The accuracy of a computation is very important in numerical analysis. There are two ways to express the size of the error in a computed result:

(a) Absolute Error
(b) Relative Error

$$\text{ABSOLUTE ERROR} = |\text{True Value} - \text{Approximate Value}|$$

$$\text{RELATIVE ERROR} = \frac{\text{Absolute Error}}{|\text{True Value}|}$$

Example:

True Value = 10/3
Approximate Value = 3.333

(a) Determine the absolute error
(b) Determine the relative error
(c) Find the significant digits

Solution:

$$\begin{aligned}\text{ABSOLUTE ERROR} &= |\text{True Value} - \text{Approximate Value}| \\ &= 10/3 - 3.333 \\ &= 0.000333... \\ &= 1 / 3000\end{aligned}$$

$$\begin{aligned}\text{RELATIVE ERROR} &= \frac{\text{Absolute Error}}{|\text{True Value}|} \\ &= \frac{(1/3000)}{(10/3)} \\ &= 1/10{,}000\end{aligned}$$

Here, the number of significant digits is 4.

PILE FOUNDATIONS

MEYERHOF'S METHOD

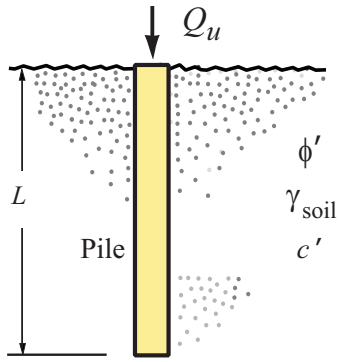

Here equations are similar to Shallow Foundation equations:

$$q_p = c' N_c^* + q' N_q^*$$

$$q_l = 0.5\, p_a\, N_q^* \tan \phi'$$

$$\left.\begin{aligned} Q_p &= A_{\text{pile}}\, q_p \\ Q_p &= A_{\text{pile}}\, q_l \end{aligned}\right\} \text{Choose the Minimum Value for } Q_p$$

A_{pile} = area of the pile cross-section

c' = cohesion of the soil

q' = vertical pressure ($q' = \gamma z$)

q_p = resistance (stress) at the tip of the pile

p_a = atmospheric pressure (100 kN/m^2 or 1780 psf)

N_c^*, N_q^* = bearing capacity factors

PILE FOUNDATIONS

SAND (GRANULAR SOIL)

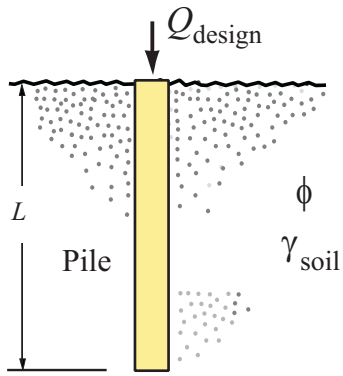

$$Q_{ult} = Q_{friction} + Q_{tip}$$

$$Q_{friction} = s.\mu.K \text{ (Area of } p_v \text{ Diagram)}$$

$$Q_{tip} = p_v \,.\, N_q \text{ (Area of the tip of pile)}$$

$$f = s.\mu.K$$

$$q_{tip} = p_v \,.\, N_q$$

Q_{ult} = ultimate (at failure) bearing capacity (kips)
$Q_{friction}$ = bearing capacity furnished by friction (between soil and pile)
Q_{tip} = bearing capacity furnished by the soil just below tip
A_{tip} = area of the pile cross-section at the tip

s = perimeter of the pile
μ = coefficient of friction ($\mu = \tan\delta$)
K = coefficient of lateral earth pressure
p_v = effective vertical pressure at the tip
N_q = bearing capacity factor

PILE FOUNDATIONS

Problem: (Pile Foundation)

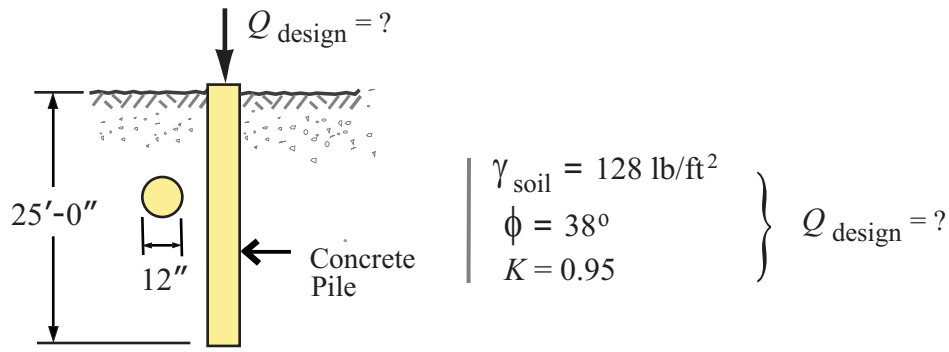

Solution:

Critical Depth: (D_c)

Vertical (overburden) pressure diagram: (p_v)

Area of the vertical pressure diagram: ($A_{surface}$)

Circumference of the pile: (s_{pile})

Coefficient of lateral earth pressure: (K)

Coefficient of friction between sand and pile: (μ)

Total skin friction: ($Q_{friction}$)

Bearing capacith factor: (N_q)

Bearing capacity at the tip of pile: (q_{tip})

Area of the tip of pile: (A_{tip})

Bearing capacity furnished by the soil just beneath the base of the pile: (Q_{tip})

Ultimate capacity of the pile: (Q_{ult})

Factor of safety ($F.S.$)

Design capacity of the pile: (Q_{design})

Problem: (Pile Foundation / SAND)

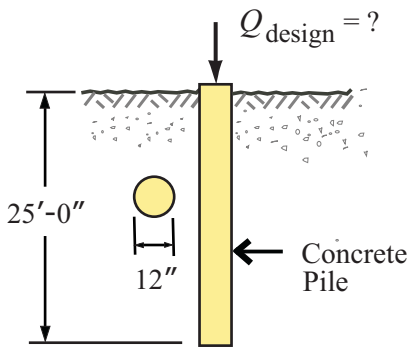

Dense Sand

$\phi = 38^o$

$K = 0.95$

$\gamma_{soil} = 128\ lb/ft^3$

$FS = 2$

A 12-in. circular concrete pile is driven at a site shown in the figure. The embeded length of the pile is 25 ft. Using the soil characteristics answer the following questions:

(1) the bearing capacity (kips) furnished by friction between the soil and the sides of the pile is most nearly:

(A) 92.6
(B) 75.0
(C) 51.5
(D) 35.4

(2) the bearing capacity (kips) furnished by the soil just below the tip of the pile is most nearly:

(A) 130.0
(B) 160.8
(C) 220.7
(D) 250.5

(3) the design bearing capacity (kips) of the pile using the factor of safety ($FS = 2$) is most nearly:

(A) 173.4
(B) 150.8
(C) 120.3
(D) 106.1

Problem: (Pile Foundation)

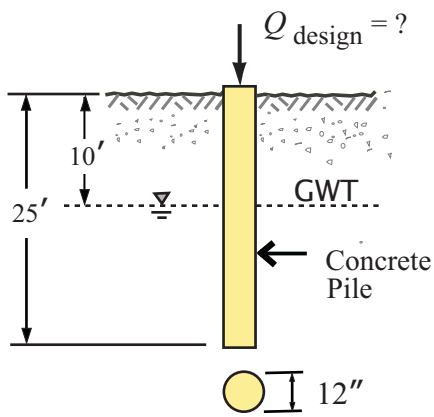

Dense Sand

$\gamma_{soil} = 128\ lb/ft^2$

$\phi = 38^o$ $\quad FS = 2$

$K = 0.95$

(1) Bearing capacity (kips) furnished by friction between the soil and the sides of the pile is most nearly:

(A) 82.5
(B) 75.3
(C) 56.2
(D) 43.1

(2) Bearing capacity (kips) furnished by the soil just below the tip of the pile is most nearly:

(A) 213.0
(B) 193.7
(C) 121.6
(D) 101.4

(3) The design bearing capacity (kips) of the pile using the given Factor of of Safety is most nearly:

(A) 77.6
(B) 82.4
(C) 95.9
(D) 116.1

STRENGTH OF MATERIALS

TORSION

IMPORTANT FORMULAS

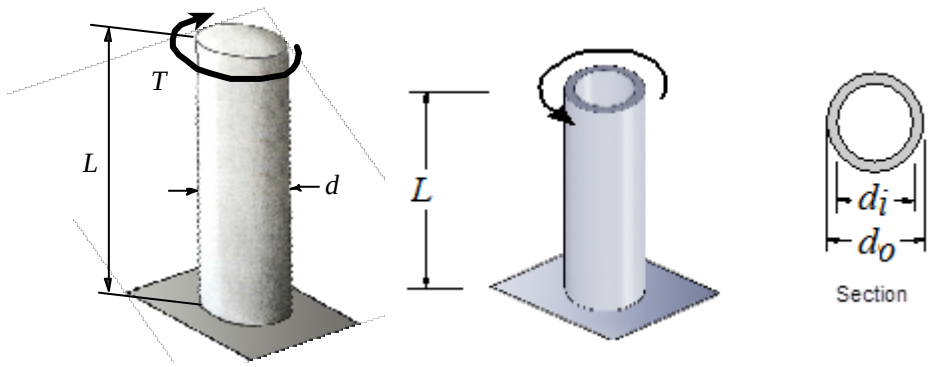

d_o: outside diameter
d_i: inside diameter

(1) $$J = \frac{\pi d^4}{32} \qquad J = \frac{\pi\left(d_o^4 - d_i^4\right)}{32}$$

(2) $$T = \frac{\tau \cdot J}{r}$$

(3) $$\phi = \frac{T \cdot L}{G \cdot J}$$

(4) $$\tau_{\max} = \frac{T \cdot r}{J}$$

NCEES-RH, Version 9.3
Page-81

ϕ = total angle of twist (radians)
T = torque, torsional moment
L = length of shaft
J = polar moment of inertia

MECHANICS OF SOLIDS

TORSION

ANGLE OF TWIST

Problem: (Torsion)

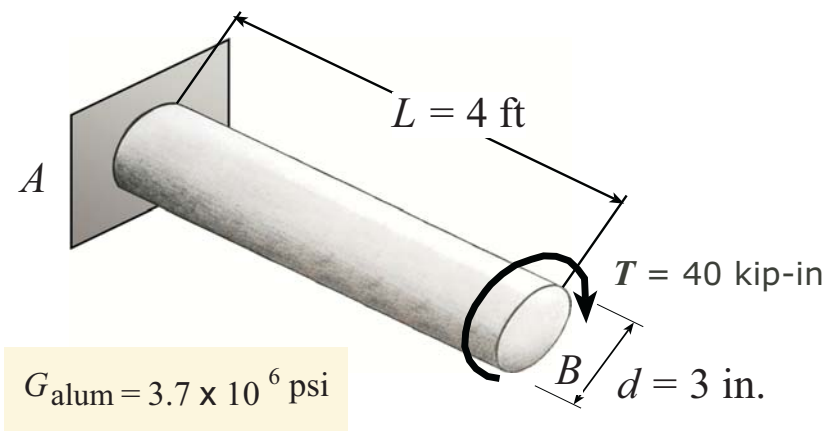

(1) A 3-in diameter solid aluminum shaft is loaded as shown. Using the listed data and the material properties the angle of twist (degrees) caused by ***T*** = 40 kip-in torque is most nearly:

(A) 5.74
(B) 4.50
(C) 4.12
(D) 3.74

$\phi_B = ?$

(2) If the given shaft is replaced by a hollow shaft with inside diameter of d_i =1 in. and outside diameter of d_o =3 in., the angle of twist (degrees) caused by the same torque ***T*** = 40 kip-in is most nearly:

(A) 2.85
(B) 3.79
(C) 4.25
(D) 5.15

$\phi_B = ?$

COMPLETE SOLUTION

Solution:

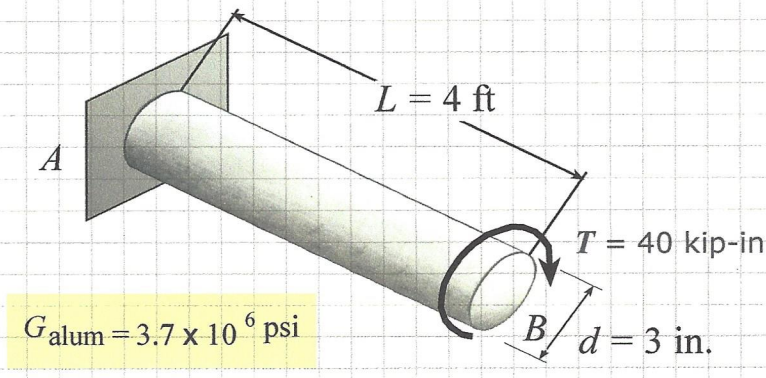

$G_{alum} = 3.7 \times 10^6$ psi

$$I_p = \frac{\pi}{32}(3)^4 = 7.9522 \text{ in}^4$$

$$\phi = \frac{TL}{GI_p} = \frac{40\times10^3 \times 4\times12}{3.7\times10^6 \times 7.9522} = 0.065254 \text{ rad.}$$

$$\boxed{\phi = 3.74^\circ}$$ ✓

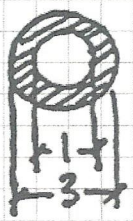

$$I_p = \frac{\pi}{32}\left[(3)^4 - (1)^4\right] = 7.85398 \text{ in}^4$$

$$\phi = \frac{TL}{GI_p} = \frac{40\times10^3 \times 4\times12}{3.7\times10^6 \times 7.85398} = 0.066071 \text{ rad.}$$

$$\boxed{\phi = 3.79^\circ}$$ ✓

AZ

MECHANICS OF SOLIDS
TORSION
SHEARING STRESS FORMULA

Problem: ***TOR-148*** ***Solution in MS Excel***

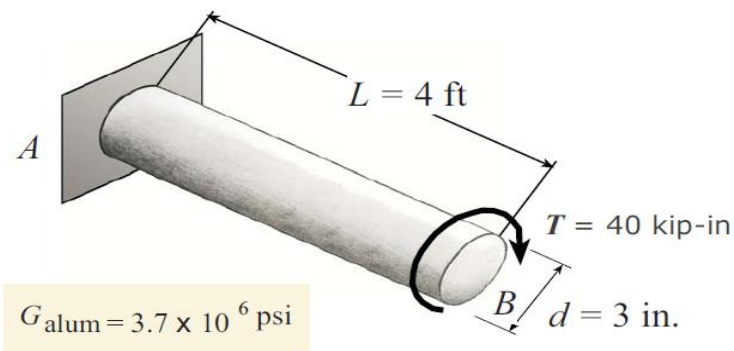

L =	4	ft
d =	3	in
T =	40	kip·in
G =	3.70E+06	psi

L =	48	in
G =	3.70E+03	ksi

(1) Solid section

I_p =	7.952	in^4
φ =	0.06526	rad
φ =	**3.74**	**deg**

$$I_p = \frac{\pi d^4}{32}$$

$$\varphi = \frac{T \cdot L}{G \cdot I_p}$$

(2) Hollow section

d_o =	3	in
d_i =	1	in

$$I_p = \frac{\pi\left(d_o^4 - d_i^4\right)}{32}$$

I_p =	7.854	in^4
φ =	0.06607	rad
φ =	**3.79**	**deg**

$$\varphi = \frac{T \cdot L}{G \cdot I_p}$$

VPLEVRIS
SPRING 2016

MECHANICS OF SOLIDS

TORSION

SHEARING STRESS FORMULA

Problem: (Torsion)

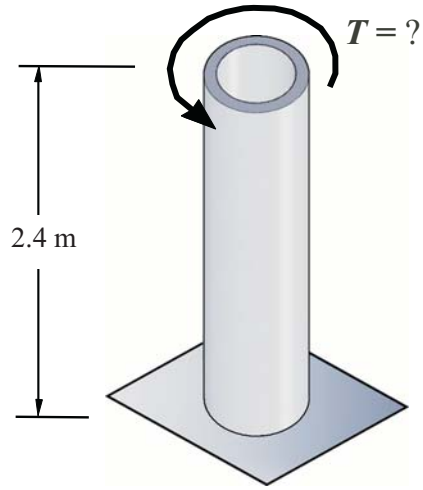

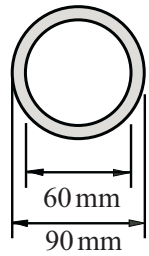

Section

$\tau_{max} = 45$ MPa

(1) A hollow cylindrical shaft is loaded as shown. Using the listed data and the given maximum shearing stress, the torque T (kN.m) would be most nearly:

(A) 6.85
(B) 5.17
(C) 4.74
(D) 3.90

$T = ?$

(2) Now assume the given shaft is replaced by a solid shaft. Also the torque that you found from above, will be used for this question. Assuming that the cross-sectional area will be same as above, then max. shearing stress (MPa) is most nearly:

(A) 65.85
(B) 87.22
(C) 94.36
(D) 98.05

$\tau_{max} = ?$

COMPLETE SOLUTION

Problem: (Torsion)

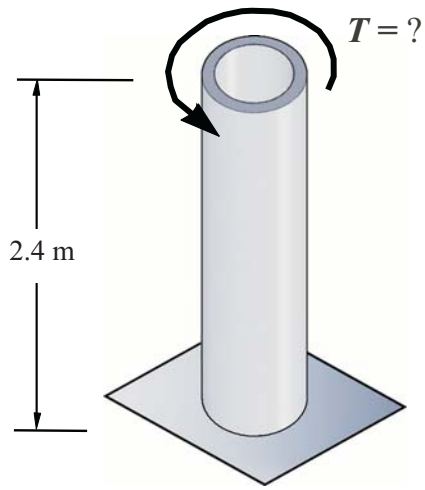

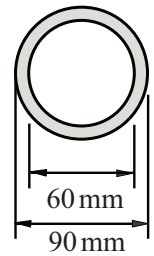

Section

$\tau_{max} = 45$ MPa

Solution:

(1)

$$I_p = \frac{\pi}{32}(90^4 - 60^4) = 5.17\times10^6\ mm^4 = 5.17\times10^{-6}\ m^4$$

$$T = \frac{\tau_{max}\cdot I_p}{r} = \frac{45\times10^6 \times 5.17\times10^{-6}}{0.045} = 5.17\ kN\cdot m$$

$$\boxed{T = 5.17\ kN\cdot m}$$

(2)

Area of tube: $A = \frac{\pi(90^2 - 60^2)}{4} = 3534\ mm^2$

Diameter of solid shaft w/ same area

$$A = \pi d^2/4 \rightarrow d = \sqrt{4A/\pi} = \sqrt{4\times3534/\pi} = 67.08\ mm$$

Polar moment of inertia of the solid shaft

$$I_p = \frac{\pi d^4}{32} = \pi(67.08)^4/32 = 1.988\times10^6\ mm^4 = 1.988\times10^{-6}\ m^4$$

$$\tau_{max} = \frac{Tr}{I_p} = \frac{5170\times0.03354}{1.988\times10^{-6}} = 87.22\times10^6\ Pa$$

$$\boxed{\tau_{max} = 87.22\ MPa}$$

MECHANICS OF SOLIDS
TORSION
SHEARING STRESS FORMULA

Problem: ***TOR-150*** ***Solution in MS Excel***

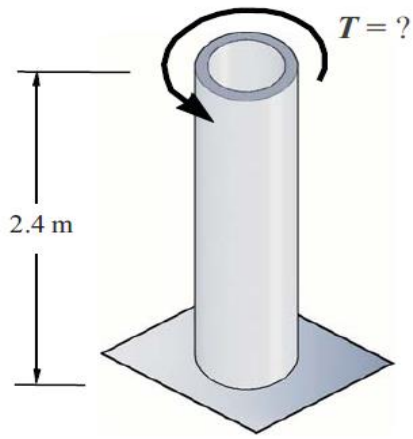

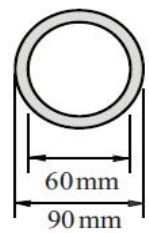

Section

τ_{max} = 45 MPa

L =	2.4	m
d_o =	90	mm
d_i =	60	mm
τ_{max} =	45	MPa

(1) Hollow (tube) section

d_o =	0.09	m
d_i =	0.06	m
r =	0.045	m
τ_{max} =	45000	kPa
J_{tube} =	5.17E-06	m^4
T =	**5.17**	**kN·m**

$$J_{tube} = \frac{\pi\left(d_o^4 - d_i^4\right)}{32}$$

$$T = \frac{\tau_{max} \cdot J}{r}$$

(2) Solid section

A =	3534.3	mm^2
d =	67.08	mm
d =	6.708E-02	m
r =	3.354E-02	m
J_{solid} =	1.988E-06	m^4
τ_{max} =	8.721E+04	kPa
τ_{max} =	**87.21**	**MPa**

$$A_{tube} = \frac{\pi\left(d_o^2 - d_i^2\right)}{4}$$

$$A_{solid} = \frac{\pi d^2}{4} \Rightarrow d = \sqrt{4A/\pi}$$

$$J_{solid} = \frac{\pi d^4}{32}$$

$$\tau_{max} = \frac{T \cdot r}{J}$$

MECHANICS OF SOLIDS

TORSION

ANGLE OF TWIST

Problem: (Torsion)

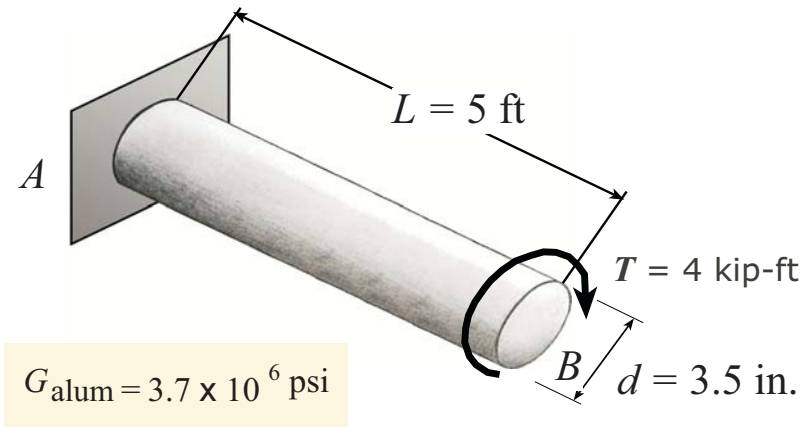

(1) A 3.5-in diameter solid aluminum shaft is loaded as shown. Using the listed data and the material properties the angle of twist (degrees) caused by ***T*** = 4 kip-ft torque is most nearly:

(A) 5.74
(B) 3.50
(C) 4.12
(D) 3.03

$\phi_B = ?$

(2) If the given shaft is replaced by a hollow shaft with inside diameter of d_i =2 in. and outside diameter of d_o =3.5 in., the angle of twist (degrees) caused by the same torque ***T*** = 4 kip-ft is most nearly:

(A) 2.85
(B) 3.39
(C) 4.35
(D) 4.15

$\phi_B = ?$

COMPLETE SOLUTION

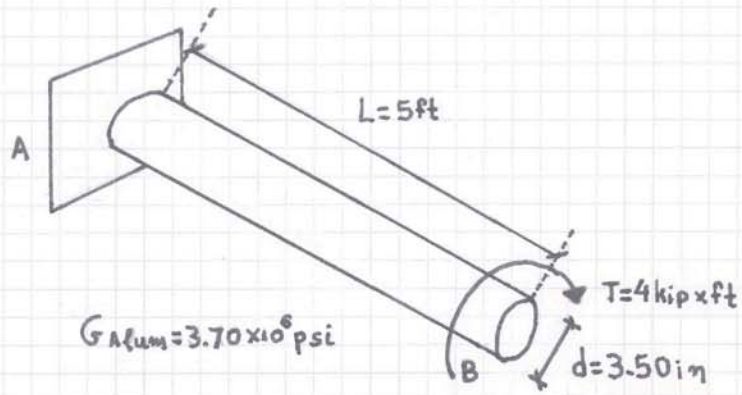

$T = 4\,kip \times ft = 4 \times 12\,kip \times in \Rightarrow T = 48\,kip \times in$

$L = 5ft = 5 \times 12\,in \Rightarrow L = 60\,in$

$G = 3.70 \times 10^6\,psi \Rightarrow G = 3.70 \times 10^3\,ksi$

1: 

d=3.50in

$J = \frac{\pi}{32} \times d^4 = \frac{\pi}{32} \times (3.50)^4\,in^4 \Rightarrow J = 14.732\,in^4$

$\phi_B = \frac{T \times L}{G \times J} = \frac{48\,kip \times in \times 60\,in}{3.70 \times 10^3\,ksi \times 14.732\,in^4} = 0.053\,rad \Rightarrow \boxed{\phi_B = 3.03^\circ}$

2: 

$d_o = 3.50\,in$

$d_i = 2.00\,in$

$J = \frac{\pi}{32} \times (d_o^4 - d_i^4) = \frac{\pi}{32} \times (3.50^4 - 2.00^4) \Rightarrow J = 13.162\,in^4$

$\phi_B = \frac{T \times L}{G \times J} = \frac{48\,kip \times in \times 60\,in}{3.70 \times 10^3\,ksi \times 13.162\,in^4} = 0.059\,rad \Rightarrow \boxed{\phi_B = 3.39^\circ}$

ANSWERS

1. (D) $\phi_B = 3.031^\circ$
2. (B) $\phi_B = 3.39^\circ$

MECHANICS OF SOLIDS
TORSION
SHEARING STRESS FORMULA

Problem: ***TOR-146*** ***Solution in MS Excel***

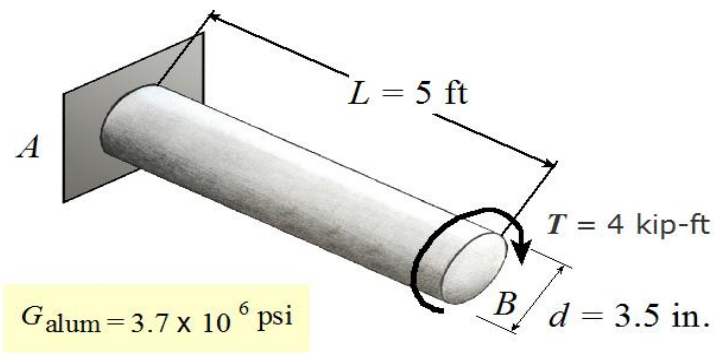

L =	5	ft
d =	3.5	in
T =	4	kip·ft
G =	3.70E+06	psi

T =	48	kip·in
L =	60	in
G =	3.70E+03	ksi

(1) Solid section

J =	14.732	in^4
φ =	0.05283	rad
φ =	**3.03**	**deg**

$$J = \frac{\pi d^4}{32}$$

$$\phi = \frac{T \cdot L}{G \cdot I_p}$$

(2) Hollow section

d_o =	3.5	in
d_i =	2	in

$$J = \frac{\pi\left(d_o^4 - d_i^4\right)}{32}$$

J =	13.162	in^4
φ =	0.05914	rad
φ =	**3.39**	**deg**

$$\phi = \frac{T \cdot L}{G \cdot I_p}$$

VPLEVRIS
SPRING 2016

Course : Mechanics of Solids
Coordinator : Zeytinci

TORSION

1 Maximum shearing stress in a shaft 2 in in diameter if applied torque is 800 ft.lb. Unit will be in psi.

a) 4,220 b) 4,860 c) 5,150 d) 6,120 e) 7,200

2 Maximum torque in a solid steel shaft 1.5 in in diameter if allowable shearing stress is 8,000 psi. Unit will be ft.lb

a) 331 b) 442 c) 553 d) 664 e) 775

3 Diameter of a solid steel shaft if applied torque is 700 N.m. and the allow. shear. stress is 55 MPa. Unit will be in mm.

a) 34.7 b) 24.6 c) 38.2 d) 250.5 e) 40.2

4 Maximum shearing stress in a solid shaft 3 in in diameter if applied torque is 3.0 k.ft. Unit will be in psi.

a) 8,400 b) 6,800 c) 7,200 d) 5,200 e) 4,600

5 Maximum torque that can be applied to a steel shaft 40 mm in diameter if allow. shearing stress is 60 MPa. Unit in N.m.

a) 576.8 b) 449.7 c) 275.0 d) 753.9 e) 686.7

6 A steel shaft 6 ft long and 2 in in diameter is subjected to a torque of 1.0 k.ft. Angle of twist in radians (G=12x10 6 psi)

a) 0.046 b) 0.056 c) 0.066 d) 0.076 e) 0.086

7 A steel shaft 6 ft long and 2 in in diameter is subjected to a torque of 1.0 k.ft. Angle of twist in degrees (G=12x10 6 psi)

a) 1.25 b) 3.24 c) 5.45 d) 4.25 e) 2.65

8 A hollow steel shaft with an 80 mm outside diameter and a 50 mm inside diameter is subjected to a torque of 360 N.m. Maximum shearing stress in the shaft in MPa is :

a) 3.35 b) 6.72 c) 7.30 d) 4.23 e) 5.86

9 A hollow steel shaft with an 80 mm outside diameter and a 50 mm inside diameter is subjected to a torque of 360 N.m. Shearing strees at the fibers at the inner surface in MPa is :

a) 1.19 b) 2.64 c) 3.46 d) 4.58 e) 5.52

10 A hollow brass shaft with a 75 mm outside diameter and a 30 mm inside diameter has an allow. shear. stress of 27 MPa. Maximum torque that can be applied in kN.m. is :

a) 2.18 b) 2.96 c) 3.42 d) 3.98 e) 4.22

11 A hollow shaft is subjected to a torque of 4.0 kN.m. The allowable shearing stress is 70 MPa and the inside diameter must be 1/2 the outside diameter. The outside diameter in mm is :

a) 44.6 b) 48.9 c) 52.4 d) 59.5 e) 67.7

12 Minimum diameter of a solid steel shaft that will not twist through more than 3 degrees in a 6 m length when subjected to torque of 12 kN.m . Diameter will be in mm :

a) 94 b) 104 c) 114 d) 124 e) 134

13 Max. shearing stress in a solid steel shaft that will not twist through more than 3 degrees in a 6 m length when subjected to torque of 12 kN.m . Unit for the stress is in MPa :

a) 25.5 b) 41.3 c) 52.4 d) 63.5 e) 74.6

STRUCTURAL ANALYSIS

INDETERMINATE BEAM ANALYSIS

FE/PE EXAM

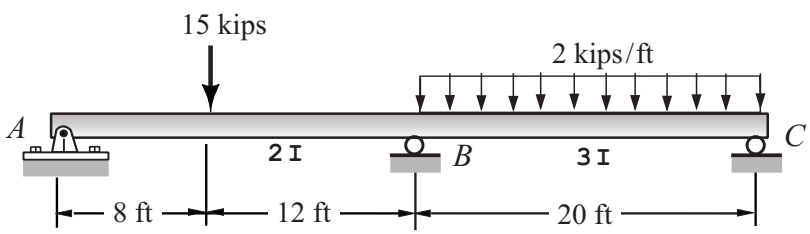

Support A : Pin
Support B : Roller
Support C : Roller

M_B = -70.24 ft-kips

An indeterminate beam is loaded as shown in the figure. Knowing that the bending moment at support B is given as listed, answer the following questions:

(1) The magnitude of the support reaction at A is most nearly, A_y

(A) 7.27 kips
(B) 4.18 kips
(C) 6.29 kips
(D) 5.49 kips

$A_y = ?$

(2) The magnitude of the support reaction at C is most nearly, C_y

(A) 18.24 kips
(B) 17.38 kips
(C) 16.49 kips
(D) 15.49 kips

$C_y = ?$

(3) The magnitude of the support reaction at B is most nearly, B_y

(A) 42.52 kips
(B) 33.02 kips
(C) 26.48 kips
(D) 20.05 kips

$B_y = ?$

COMPLETE SOLUTION

Ekaterina Krupko
THEORY OF STRUCTURES
Fall 2014 / Date: DEC. 16

UNIVERSITY OF THE DISTRICT OF COLUMBIA

INSTRUCTOR
ZEYTINCI

PROBLEM # 3

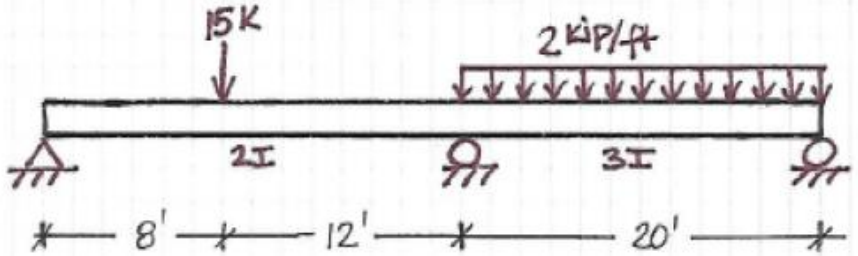

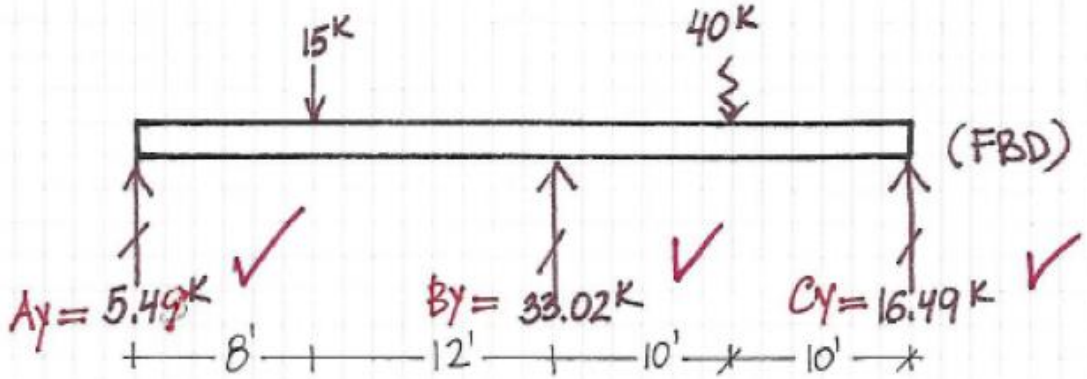

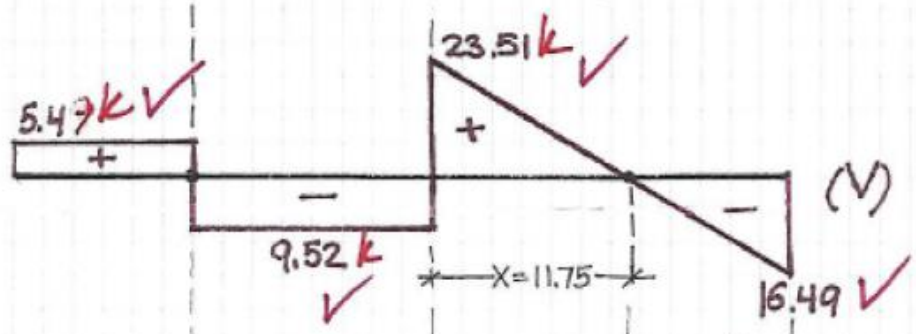

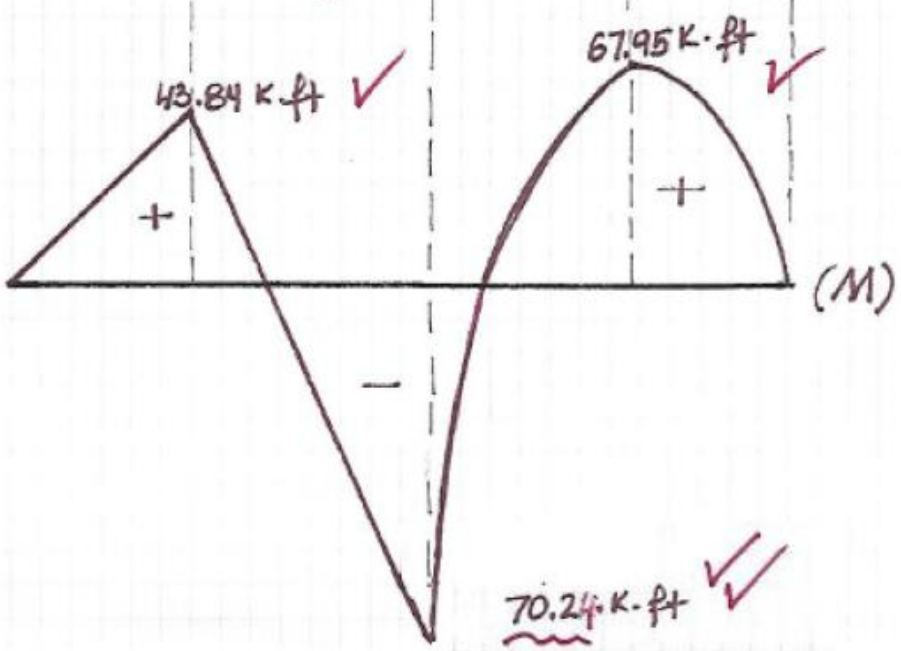

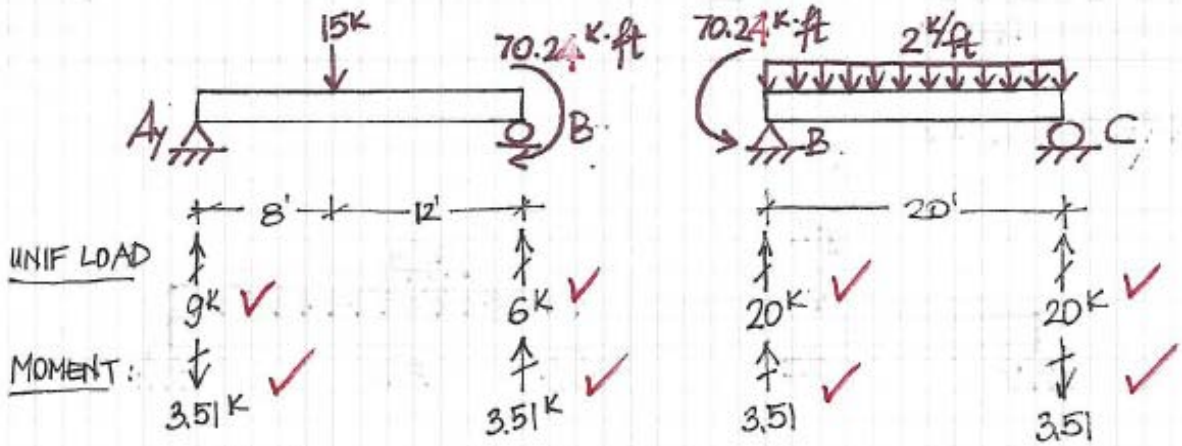

$A_y = (15)\left(\frac{12}{20}\right) = 9^K \uparrow$

$B_y = (15)\left(\frac{8}{20}\right) = 6^K \uparrow$

11.76'

$x = \frac{23.51}{2} = 11.755$

$A = \frac{11.75 \times 23.51}{2} = 138.18$

$M = 138.18 - 70.23 =$
$= 67.95$ K·ft

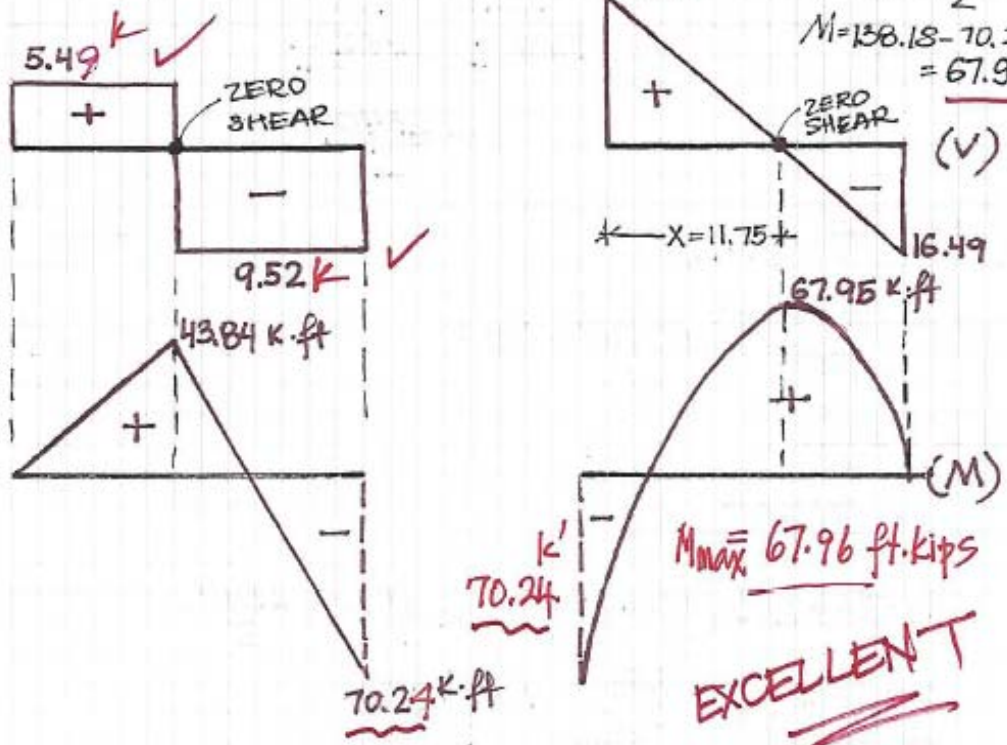

$M_{max} = 67.96$ ft.kips

EXCELLENT

$A_y = 9^K - 3.51^K = 5.49^K \uparrow$

$B_y = 6^K + 3.51^K + 20^K + 3.51^K = 33.02^K \uparrow$

$C_y = 20^K - 3.51^K = 16.49^K \uparrow$

FUNDAMENTALS OF ENGINEERING

DOMAIN: STATICS

NCEES Reference Handbook / Page 63

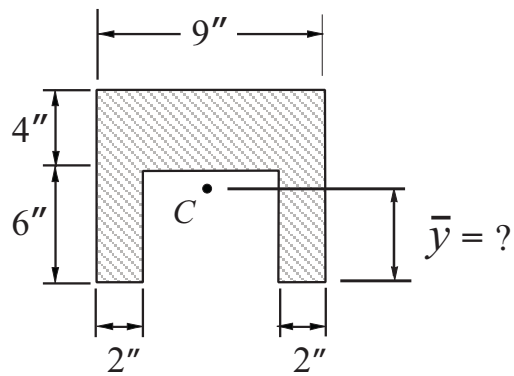

FE/PE EXAMS

The dimensions of a composite area are given as shown in the figure. Using the listed data answer the following questions:

(1) the distance $\bar{y}$ (in.) of the centroid is most nearly

(A) 7.30
(B) 7.82
(C) 6.75
(D) 6.00

$\bar{y}$ = ?

(2) the moment of inertia (in.^4) about the horizontal centroidal axis is most nearly (I_{cx})

(A) 642
(B) 504
(C) 480
(D) 395

I_{cx} = ?

(3) the moment of inertia (in.^4) about the vertical centroidal axis is most nearly (I_{cy})

(A) 468
(B) 545
(C) 648
(D) 735

I_{cy} = ?

Answers
1- (D)
2- (C)
3- (B)

Shear Force and Bending Moment Diagrams

FE EXAM

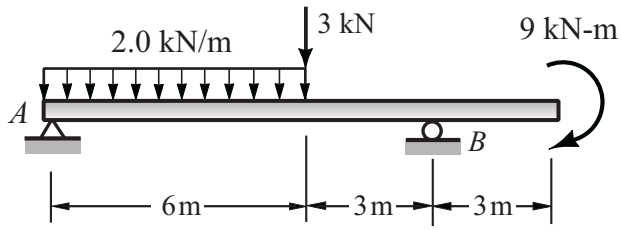

Support A : Hinge
Support B : Roller

The **shear force** diagram of this beam is most nearly:

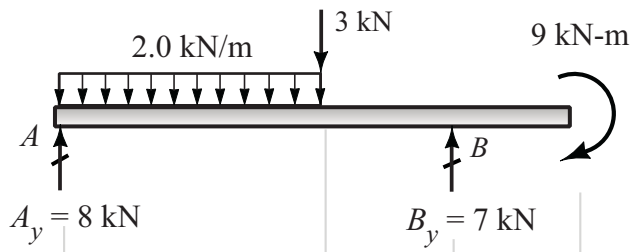

(FBD)

(A)

(B)

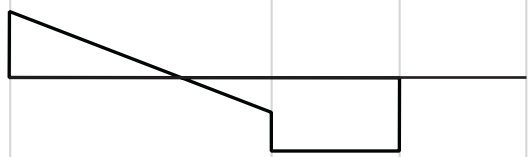

(C)

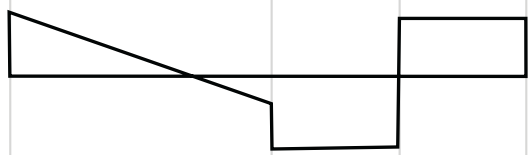

(D)

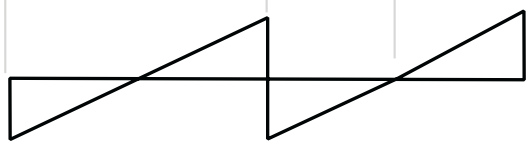

Problem: (Design Strength)

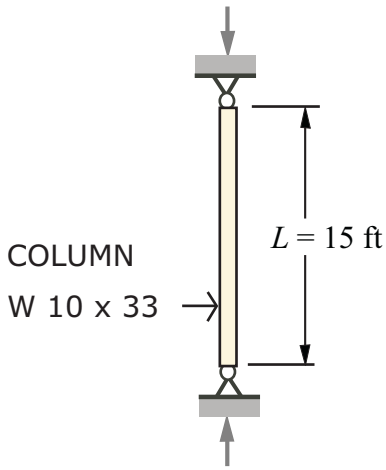

W 10 x 33
ASTM-A992 Steel
Both Ends Pinned

$E = 29 \times 10^3$ ksi

(a) Find the slenderness ratio (KL/r)
(b) Find the Euler Stress (F_e)
(c) Find the critical buckling stress (F_{cr})
(d) Find the nominal compressive strength (P_n)
(e) Find the design compressive strength ($\phi_c P_n$)

Solution:

W 10 x 33

Steel / A992
$F_y = 50$ ksi
$F_u = 65$ ksi

$A_g = 9.71$ in^2
$r_x = 4.19$ in.
$r_y = 1.94$ in.

$r_{min} = 1.94$ in.

The Slenderness Ratio: (KL / r) Here K = 1.0, NCEES-Ref. Book / Page 158

KL / r_{min} = 1.0 x (15 x 12) / 1.94 = 92.78 < 200 O.K.

The Criteria for the Critical Buckling Stress Equation: (F_{cr})

$$4.71\sqrt{\frac{E}{F_y}} = 4.71\sqrt{\frac{29{,}000}{50}} = 113.4$$

$(KL/r_{min}) = 92.78 < 113.4$, Use AISC Equation E 3.2

The Euler Stress (F_e)

$$F_e = \frac{\pi^2 E}{(KL/r_{min})^2} = \frac{\pi^2 (29{,}000)}{(92.78)^2} = 33.25 \text{ ksi}$$

STRESS RATIO:

$$F_y / F_e = 50 / 33.25 = 1.504$$

The Critical Buckling Stress: (F_{cr})

$F_{cr} = (0.658^{F_y/F_e}) \cdot F_y = (0.658)^{(1.504)}(50) = 26.65$ ksi (AISC Equation E 3.2)

The Nominal Compressive Strength: (P_n)

$P_n = F_{cr} \cdot A_g$ F_{cr} = (26.65) (9.71) = 258.77 kips

The Design Compressive Strength: ($\phi_c P_n$)

$\phi_c P_n$ = 0.90 x 258.77 = 232.9 kips

$\phi_c P_n$ = 232.9 kips

Dr. Z's PRO-BONO SATURDAY CLASSES

February 6, 2016

11:00 am – 2:25 pm

Dr. Z's PRO-BONO SATURDAY CLASSES

Students & Practicing Engineers are Welcome!

Washington, D.C. Metro Area

Participated Schools:

- University of the District of Columbia
- George Mason University
- Howard University
- Catholic University of America
- Morgan State University
- University of Maryland, College Park
- Virginia Tech
- Villanova University
- North Carolina A & T State University

Instructor:

Ahmet Zeytinci, Ph.D., P.E., F-NSPE
Dr. M. H. Parker, Distinguished Educator's Award-2016
NSPE-Excellence in Engineering Education Award-2015
ASEE-MA Outstanding Campus Representative Award-2014
D.C. State Coordinator, MATHCOUNTS
Email: az@alfam.com
Tel: 240-535-6060 (cell)